PMAC203
DC Branch Circuit Power Meter

Application

- DC load management
- Data Center Power Manage
- Telecommunication Power Manage
- DC Insulation resistance monitoring

DC power system voltage:

- 240VDC with 24VDC Hall sensor
- 48VDC with +/-12VDC Hall sensor
- Customizable DC voltage level, from 48~ 400VDC

Function

- **Measuring:** 1 main circuit + 42 branch circuits, Hall sensor zero point calibration
- **DI:** 4 status inputs (dry contact) for Main breaker and Lightning protection switch,
- **DO:** 2 relay outputs for alarm, 1 pulse output
- **Settable Pre-Alarm function:**
  Main circuit: Alarm for voltage, current, load, breaker status. Option alarm for Insulation resistance and temperature.
  Branch circuit: Alarm for current (lo-lo-limit, lo-limit, hi-limit, hi-hi-limit), breaker status. Option Insulation resistance .
- **Communication:** RS485, support Modbus-RTU protocol
- **Optional Hall Sensor input for Main circuit:** 100A, 200A, 400A, 600A, 800A, 1600A
- **Optional Hall Sensor input for Branch circuit:** 50A, 100A, 200A
- **Hall sensor zero point calibration**
- **Optional mean and branch circuit status monitor**
- **Temperature and isolation monitor**
- **Historical kWh record:** kWh yearly consumption of last 10 years,
  kWh monthly consumption of last 12 months

Measurement

Main circuit measuring:

	Accuracy
Voltage --(240VDC, -48VDC)	(0.2%)
Current – I, Max I, Demand I & Imax	(0.5%)
Power– Active Power, Demand P & Pmax	(0.5%)
Active energy – kWh	(1.0%)
Insulation resistance (optional)	(0.5%)
Temperature (optional)	(0~120'C)

Branch circuit measuring:

	Accuracy
Voltage --(240VDC, -48VDC)	(0.2%)
Current – I, Demand I & Imax, Max I	(0.5%)
Power– Active Power, Demand P & Pmax	(0.5%)
Active energy – kWh	(1.0%)
Insulation resistance (optional)	(0.5%)

PMAC203 & Accessories:

Unit: mm

◆ **Main Module :**

PMAC203 / PMAC203JY

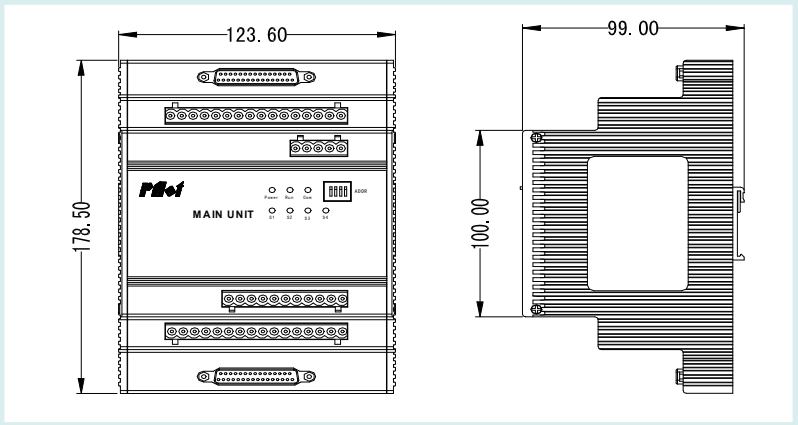

Note: PMAC203 for branch power measure.
PMAC203JY for branch isolation measure.

◆ **Hall sensor Power source module:**

RD3513

Input: 85~264VAC, 120~300VDC
Output: 24VDC

PMAC106

Input: -48VDC (+/-20%)
Output: +/-12VDC

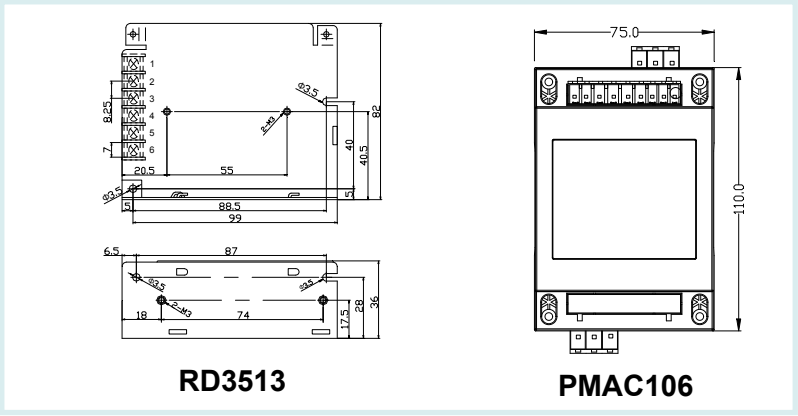

RD3513 **PMAC106**

◆ **Hall sensor for Main input measure**
(Power: 24VDC or +/- 12VDC)

HOS Series
100A,200A,400A,600A,800A,1600A

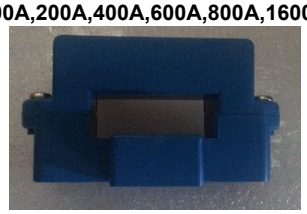

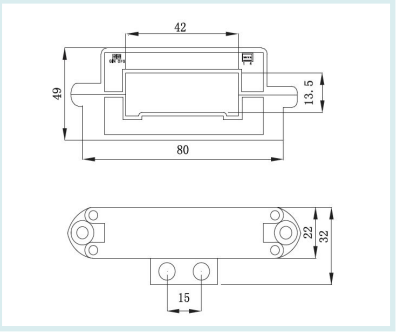

◆ **Hall sensor for branch circuit measure**
(Power: 24VDC or +/- 12VDC)

HCS Series
50A,100A,200A

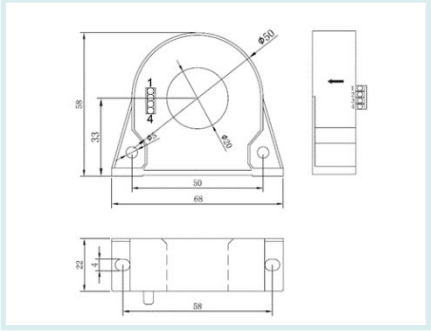

◆ **Hall sensor for insulation measurement**
(Power: 24VDC or +/- 12VDC)

DLS Series
10mA

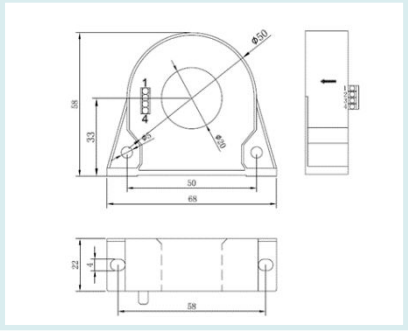

PMAC203 & Accessories:

Unit: mm

◆ **DI module and temperature sensor:**

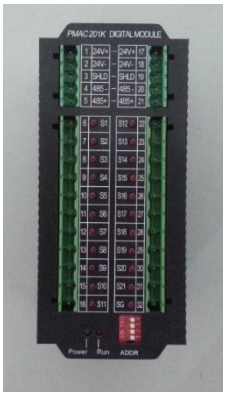

PMAC201K

PT100

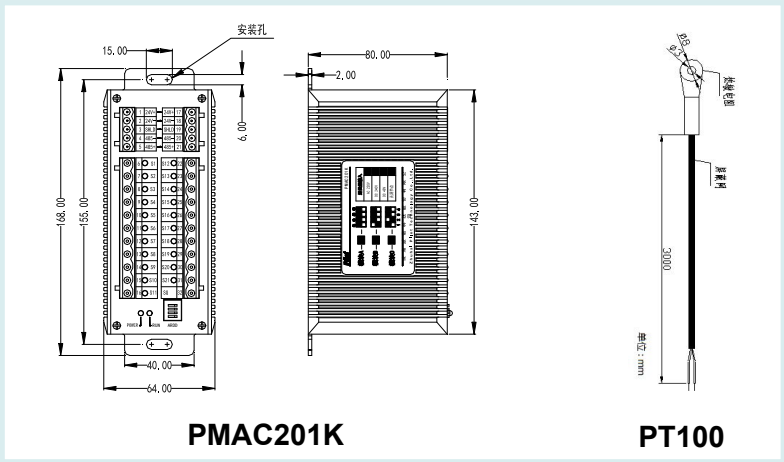

PMAC201K **PT100**

Optional devices:

1) **HMI:** 7" touch screen LCD. One HMI monitors max. 4 units of PMAC202 main module

Resolution ratio: 800×480

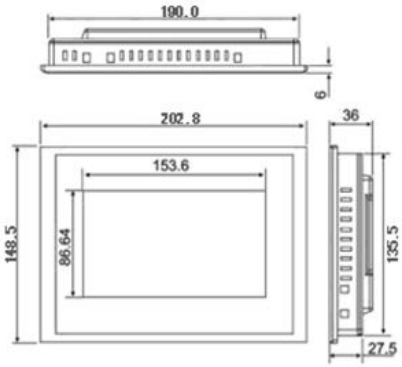

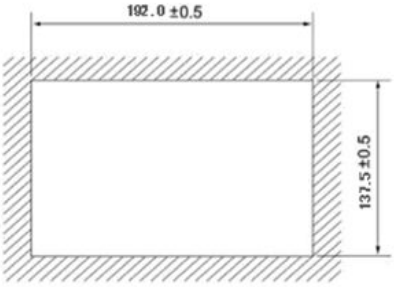

Circuit diagram

Real time measurement
Main circuit

Real time measurement
Branch circuit

Parameter and Alarm Setting

History and Alarm record

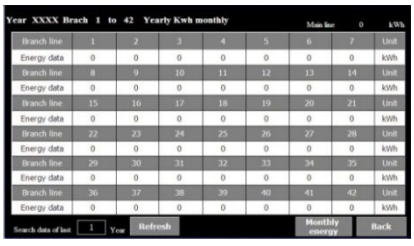

History Energy Record

Technical Specification:

Incoming circuit	1 circuit,
Outgoing circuit	42 circuit
Power supply	24V DC , range: 18~30V DC
MTBF	⩾50000h
Service Life	10 years
Rated Voltage	240VDC or 48V, or customization Range: 10%~120%, Accuracy: 0.5%
Rated incoming circuit current	Range: 1%~120%, Accuracy: 0.5%
Rated outgoing circuit current	Range: 1%~120%, Accuracy: 0.5%
Active Power and Active Energy	Incoming circuit Accuracy: 1% Outgoing circuit Accuracy: 1%

Communication	RS485 port Baud rate: 2400, 4800, 9600, 19200, 38400
DI module	Incoming circuit: Dry contact Branch circuit: Dry or wet contact (240VDC or 48VDC)
Relay output capacity	250Vac/5A or 30Vdc/5A
IP index	Main Module: IP20 HMI (Front board): IP65
Insulation Resistance	⩾100MΩ IEC62052-11
Environment	Operation: -10℃ ~ +55 ℃ Storage : -25℃ ~ +70 ℃ Humidity: 5%~95%, non-condensing

ZHUHAI PILOT TECHNOLOGY CO., LTD.
PILOT (HENGQIN) CO., LTD.
Add: No. 15, Keji 6 Road, Chuangxin Haian, Tangjia Hi-tech Zone, Zhuhai, Guangdong, China
Post Code: 519085
Tel: +86 756 3639029/ 3626166
Fax: +86 756 3629600/ 3629700
Email: overseamarket@pmac.com.cn
http://www.pmac.com.cn

Your representative